Batteries

IB PHYSICS | ELECTRICITY

Batteries

Primary Cells

Secondary Cells

Battery Shape	Chemistry	Nominal Voltage	Rechargable?
AA, AAA, C, and D	Alkaline or Zinc-carbon	1.5V	No
9V	Alkaline or Zinc-carbon	9V	No
Coin cell	Lithium	3V	No
Silver Flat Pack	Lithium Polymer (LiPo)	3.7V	Yes
AA, AAA, C, D (Rechargeable)	NiMH or NiCd	1.2V	Yes
Car battery	Six-cell lead-acid	12.6V	Yes

Recharging?

Some batteries can reverse the chemical reaction that produces the potential difference by passing a current through the battery in the opposite direction as it would normally travel

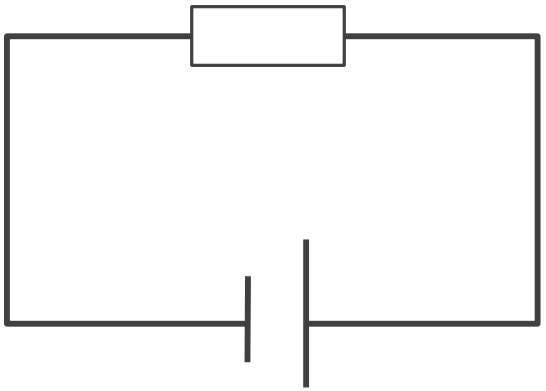

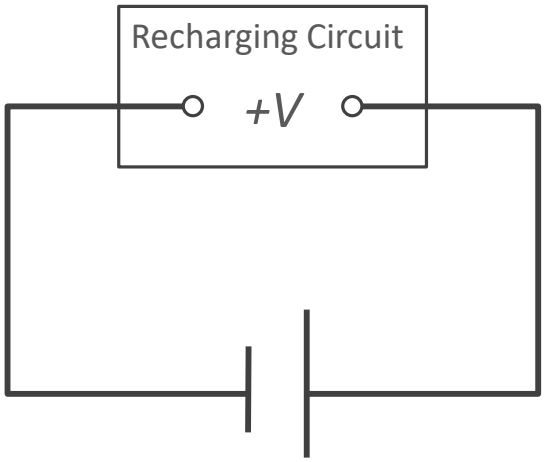

Batteries | emf

We've been describing batteries so far as the voltage that they provide to the circuit, but that's not the whole story…

Electromotive Force (emf)
The total energy transferred in the source per unit charge passing through it

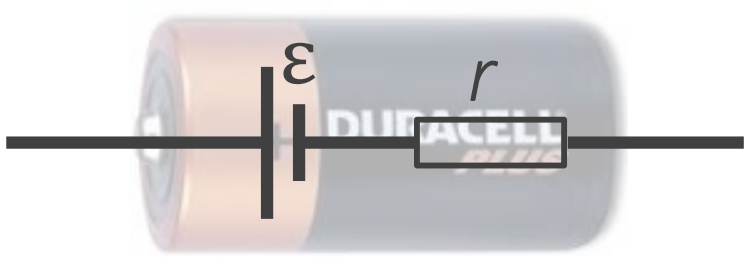

Symbol

Unit

Batteries | Internal Resistance

All batteries have some amount of internal resistance

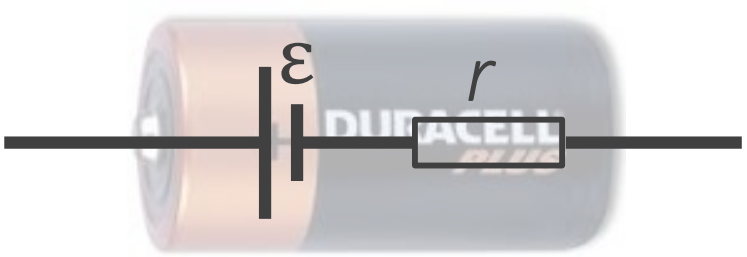

Symbol

Unit

Batteries | emf

What is the emf for a battery shown below?

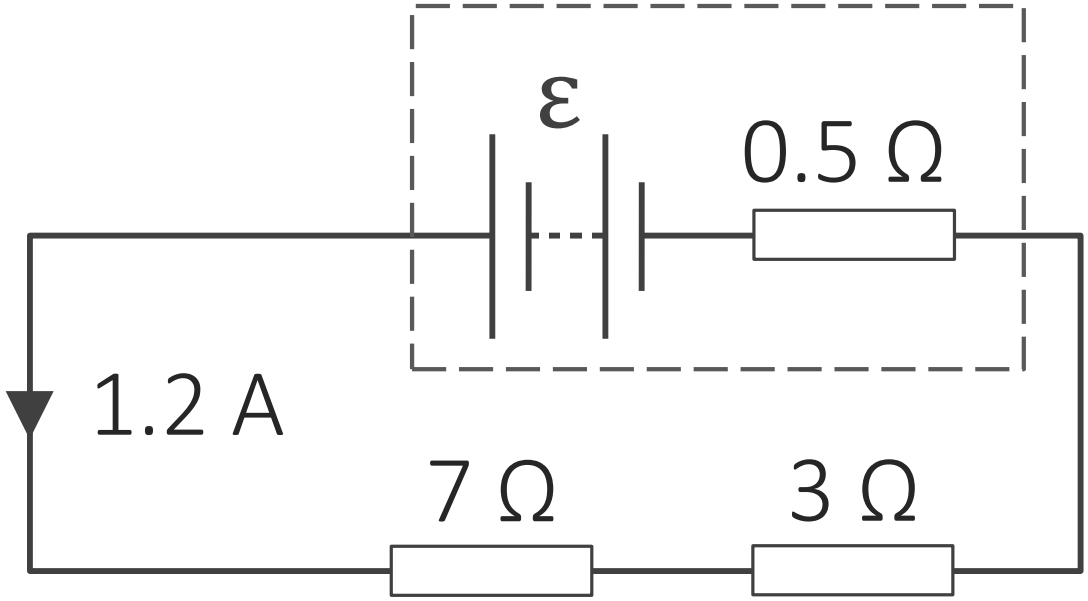

IB Physics Data Booklet

Sub-topic 5.1 – Electric fields	Sub-topic 5.2 – Heating effect of electric currents
$I = \frac{\Delta q}{\Delta t}$ $F = k\frac{q_1 q_2}{r^2}$ $k = \frac{1}{4\pi\varepsilon_0}$ $V = \frac{W}{q}$ $E = \frac{F}{q}$ $I = nAvq$	Kirchhoff's circuit laws: $\Sigma V = 0$ (loop) $\Sigma I = 0$ (junction) $R = \frac{V}{I}$ $P = VI = I^2R = \frac{V^2}{R}$ $R_{\text{total}} = R_1 + R_2 + \cdots$ $\frac{1}{R_{\text{total}}} = \frac{1}{R_1} + \frac{1}{R_2} + \cdots$ $\rho = \frac{RA}{L}$
Sub-topic 5.3 – Electric cells	**Sub-topic 5.4 – Magnetic effects of electric currents**
$\varepsilon = I(R + r)$	$F = qvB\sin\theta$ $F = BIL\sin\theta$

Batteries | Terminal Voltage

What is the terminal voltage for a battery shown below?

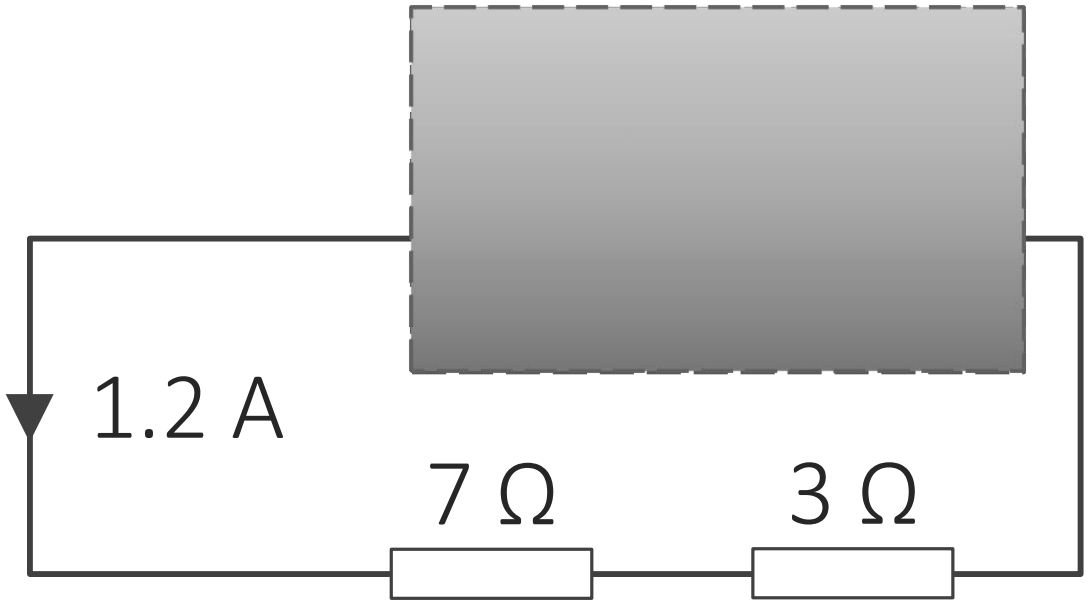

Batteries | Internal Resistance

What is the internal resistance of this battery as shown below?

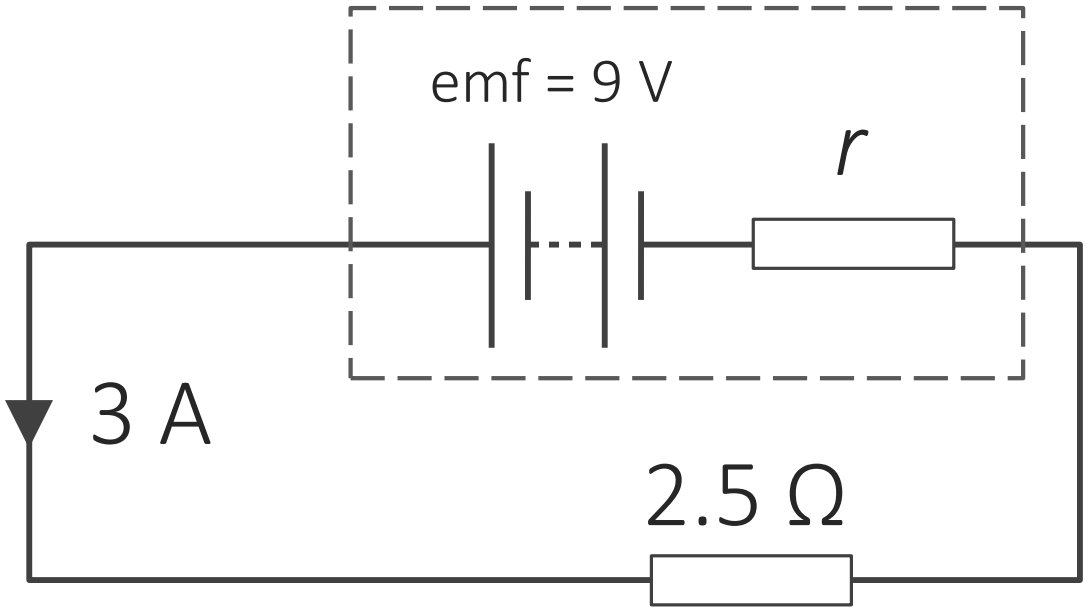

Graphing Internal Resistance

$$\varepsilon = I(R + r)$$

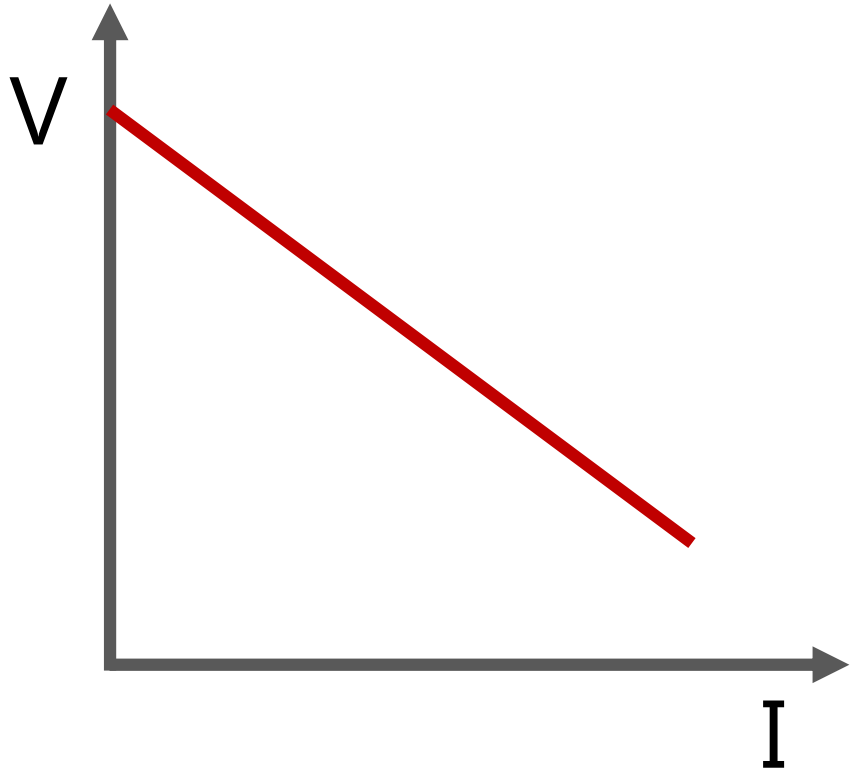

Lesson Takeaways

- ❑ I can describe the difference between primary and secondary cells
- ❑ I can define the electromotive force and describe how is it is different than the battery's terminal voltage
- ❑ I can solve for a circuit that includes a battery with internal resistance
- ❑ I can describe how to determine emf and internal resistance from a Voltage vs Current graph